Date: ---------- Location: ----------

Product: ---------- Project: ----------

Quantity: ---------- Catalog# ----------

40W Emergency LED Driver

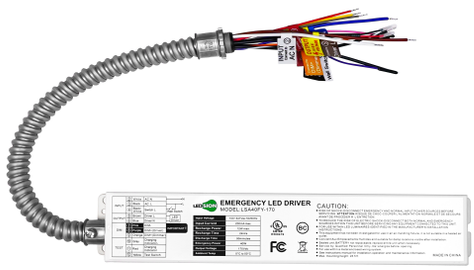

FEATURES

- 40W Emergency Driver UL Listed for US and CANADA
- Listed to UL924 and tested to CSA C22.2 NO.141 Field or factory installation
- Low energy consumption CEC Title20 compliance
- High output voltage
- Constant output power
- Self-testing
- Over Temperature Protection Over Charge Protection Over Discharge Protection
- For wiring to the led driver's AC input

Electric Characteristic

Model NO	Input Voltage	Input Current	Recharge Power	Time Recharge	Output Voltage	Emergency Power	Discharge Time	Battery
LSA40FY-170	100~347Vac	200mA max	12W max	24H	170VDC	40W	1.5H	Li-ion battery

The unit of LSA40FY-170 for led lamp less than 320w (When the fixture dim to the minimum,the power needs to be less than that of emergency led driver).

SELF-TESTING:

The integrated Sel- Diagnostic circuitry will automatically conduct monthly 30-second and annual 90-minute tests to verify pro peremergency capability per Life Safety Code requirements.NFPA 101, Life Safety Code Outlines the following schedule:

Monthly-During AC mode, the system conducts a (30)seconds self-discharge test of the emergency led driver every 30 days.And automatically restore to normal charging after (30)seconds dis-charged.

Annually- During AC mode, the system conducts a (90)minutes self-discharge test of the emergency led driver every 365 days.And automatically restore to normal charging after fully dis-charged.

INSTALLATION MANUAL

! ! ! IMPORTANT SAFEGUARDS !!!	WHEN USING ELECTRICAL EQUIPMENT, BASIC SAFETY PRECAUTION SHOULD ALWAYS BE FOLLOWED, INCLUDING THE FOLLOWING

READ AND FOLLOW ALL SAFETY INSTRUCTIONS

1.CAUTION- This emergency diver provides more than one power supply output source. To reduce the risk of electrical shock, disconnect both normaland emergency source by turning off the A.C. branch circuit.

2. CAUTION- Servicing of this equipment should be performed by qualified personnel only

3. CAUTION- Do not attempt to service the battery. A sealed, no-maitenence battery is used that is not field replacable. Replace the entire unit when necessary.

4. CAUTION- The use of accessory equipment not recommended by the manufacturer may cause an unsafe condition, void warranty, and result in non-compliance with UL specifications.

5. CAUTION- Connnect the emergency driver battery pack to the unit before applying A.C. Power

6. CAUTION- The emergency driver requires an un-switched AC power source of 100-347VAC, 50/60Hz. Verify the correspondent electrical rating at the LED fixture before servicing. Both of the electrical rating will supply power under an output voltage of 170VDC in emergency mode for at least 90 minutes.

7. CAUTION- Battery pack should be charged for 24 hours every 6 months during storage.

8. CAUTION- Press test switch again to turn off emergency before shipping.

9. Battery in this unit may not be fully charged. After electricity is connected to the unit for at least 24 hours, then normal operation of this unit should take effect.
10. For use in 0°C minimum, 50°C maximum ambient temperatures. Suitable for use in damp locations and plenum spaces.
11. The emergency driver should be mounted in locations and at heights where it will not readily be subjected to tampering by unauthorized personnel.
12. Do not use this equipment for anything other than its intended use. Equipment only use for LED Lighting emergency backup. unit when necessary.
13. Do not mount near gas or electric heaters. Do not let power supply cords touch hot surfaces.
14. Do not make or leave any other open holes in the wiring enclosure or electrical component enclosure during installation.
15. The emergency driver have battery inside, forbidden for insulation voltage(I/P-O/P) test.
16. This fixture is for use with grounded, UL Listed, damp location rated, indoor fixture. Not for use in heated air outlets or hazardous locations.
17. Maximum installation height: 28.5 feet.
18. Do not use outdoor.

LUMEN OUTPUT DURING EMERGENCY OPERATION

The luminaire rated data and maximum mounting height can be found as follows:

1. Determine the fixture efficacy under normal AC operation, based on fixture manufacturer published data in lumens per watt(LM/W).
2. Reference DLC QPL (www.designlights.org) and Energy Star QPL (www.energystar.gov) for rated data on fixture efficacy If fixture is not found on DLC or Energy Star Qualified Product List, contact fixture manufacturer
3. Multiply fixture LM/W by rated output power of emergency pack Example 'model LSA40FY-170' is 15 W 100 LM/W = 1500 Lumens

This product has been designed and tested to compatible with most of led drivers in the market. However, compatibility cannot be guaranteed with all current and future LED drivers or fixtures. So compatibility testing of the end-use system is suggested.
Please contact the factory with any questions.

Caution:Before Installation,Make Certain The A.C. Power is Off !

STEP1: INSTALLING THE EMERGENCY LED DRIVER

> Turn off the AC power before installing.
> Test switch and indicator light shall be installed where can be seen depending on the application.
> The voltage input to the dimmable wires (DIM+,DIM-) of emergency LED driver must less than 20Vdc.
> Determine appropriate location for emergency driver on the fixture or using brackets to fix emergency driver on the fixture. The installation instruction of LED luminaire may provide guidance on mounting location.

STEP2: WIRING THE EMERGENCY DRIVER

> Select the appropriate wiring diagram to connect the emergency driver to the driver's AC input. For other diagrams, consult the manufacturer
> Using wire nuts to cover unused wires and make sure all connections are in accordance with the NEC and any local regulations

STEP3: TESTING

> After wiring is complete, check if the indicator light lights or not , which will indicate the battery's charging situation
> The battery in this unit may not be fully charged. A short-term discharge test may be conducted after the emergency driver has been charging for 1 hour. Charge for 24 hours before conducting a long-term discharge test.

SAVE THESE INSTRUCTIONS

C UL US LISTED

BC MEETS CEC ENERGY EFFICIENCY STANDARDS

THIS PRODUCT CONTAINS A RECHARGEABLE LITHIUM BATTERY.
THE BATTERY MUST BE RECYCLED OR DISPOSED OF PROPERLY TO PREVENT FIRE.

OPTIONAL ACCESSORIES

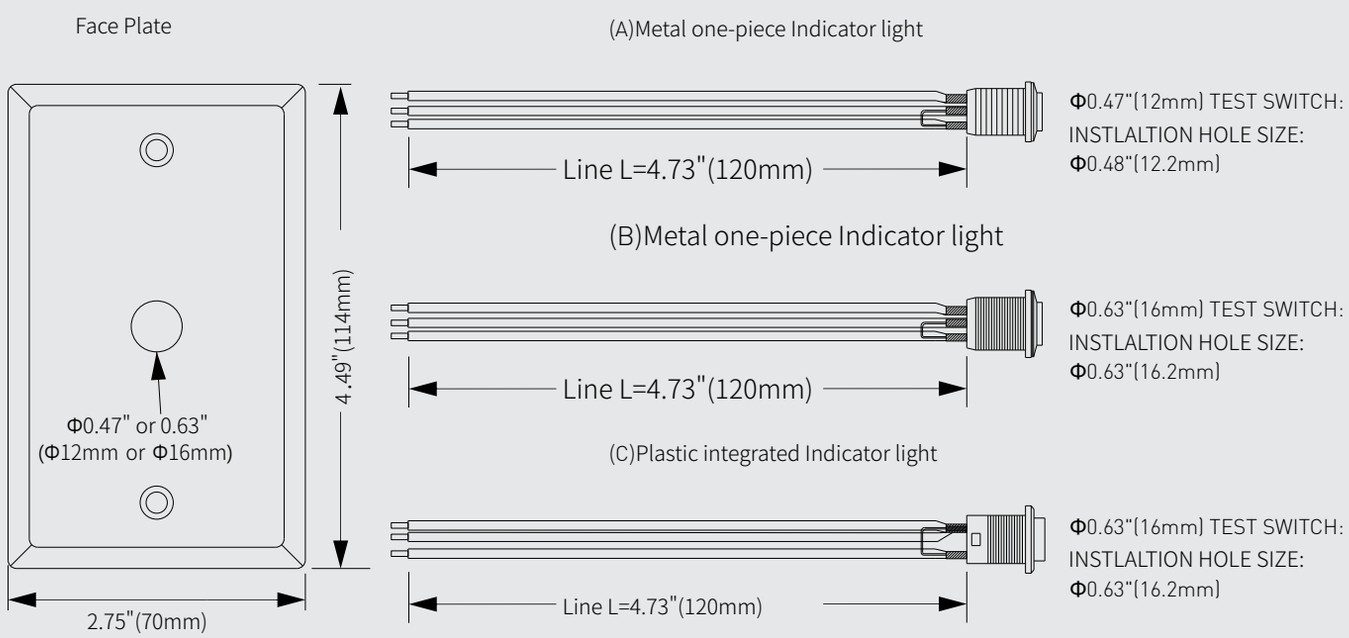

DIMENSIONS

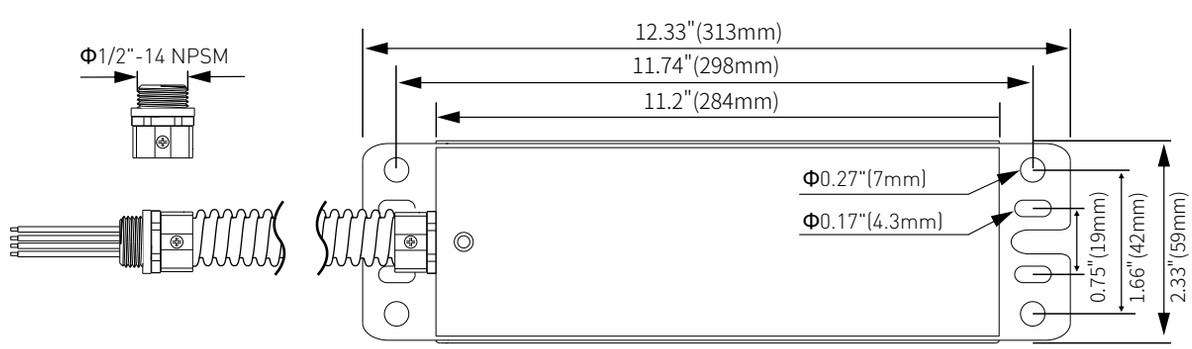

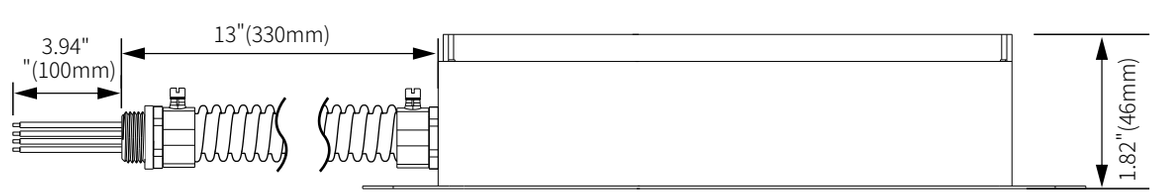

WIRING DIAGRAM

Note: The LED fixture must integrated with 0-10V driver, when LED fixture power is more than Emergency backup unit power.

FIG A. without dimmer & sensor

NOTE: FOR LED FIXTURE'S POWER ≥ EMERGENCY LED DRIVER'S

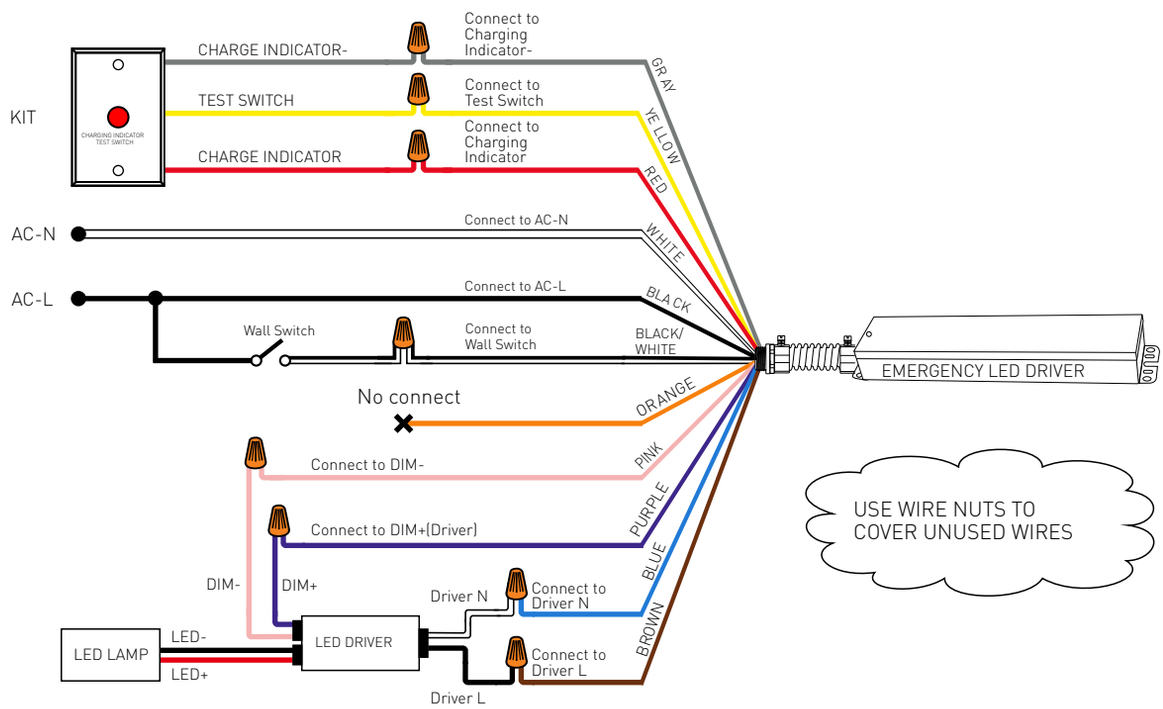

FIG B. with dimmer

NOTE: FOR LED FIXTURE'S POWER ≥ EMERGENCY LED DRIVER'S

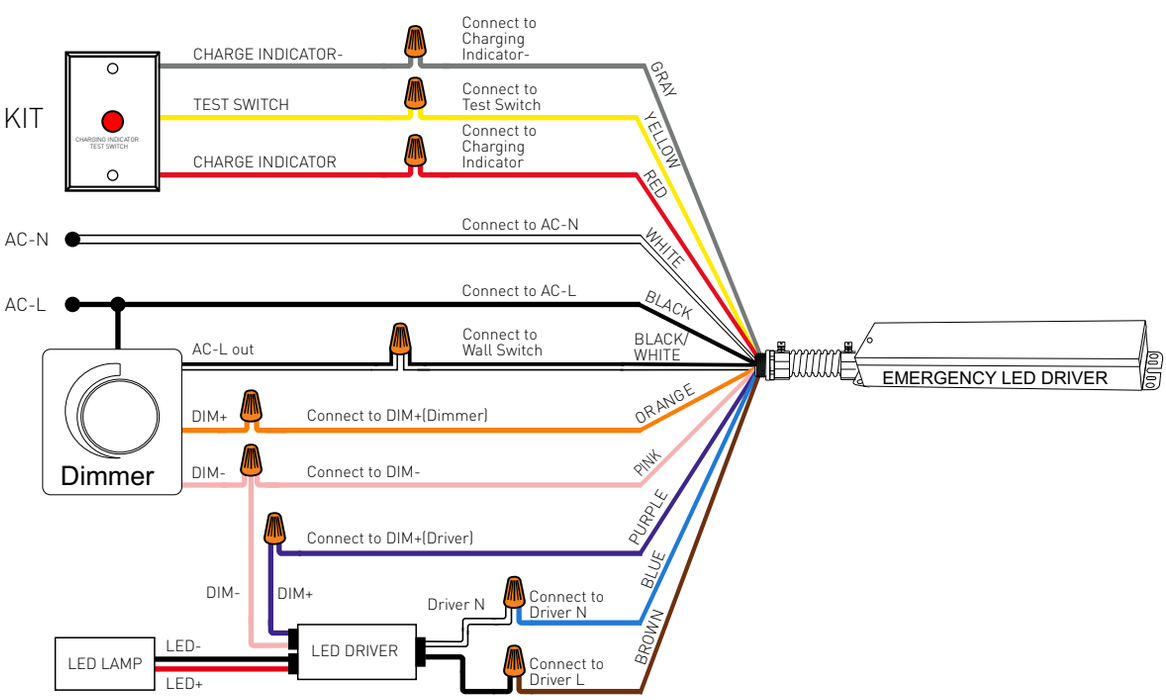

FIG C. with DC sensor

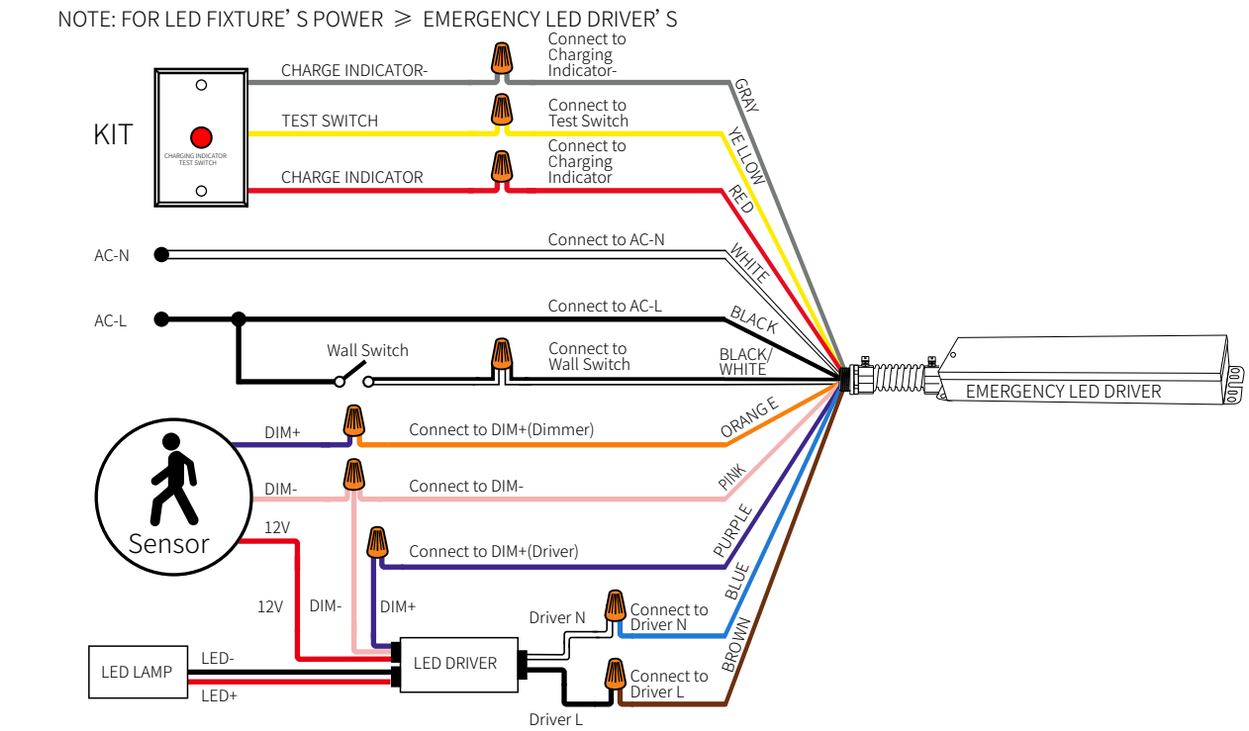

FIG D. with AC sensor

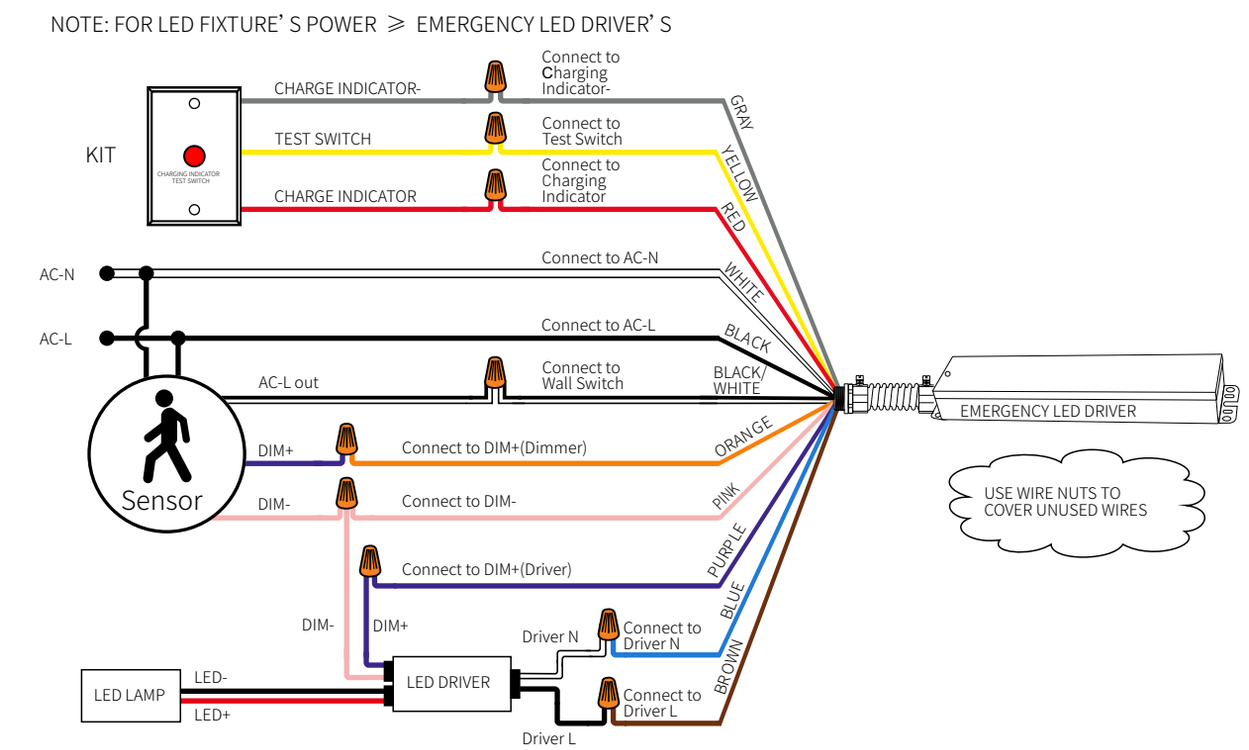

FIG E. normal solution

NOTE: FOR LED FIXTURE'S POWER ≤ EMERGENCY LED DRIVER'S

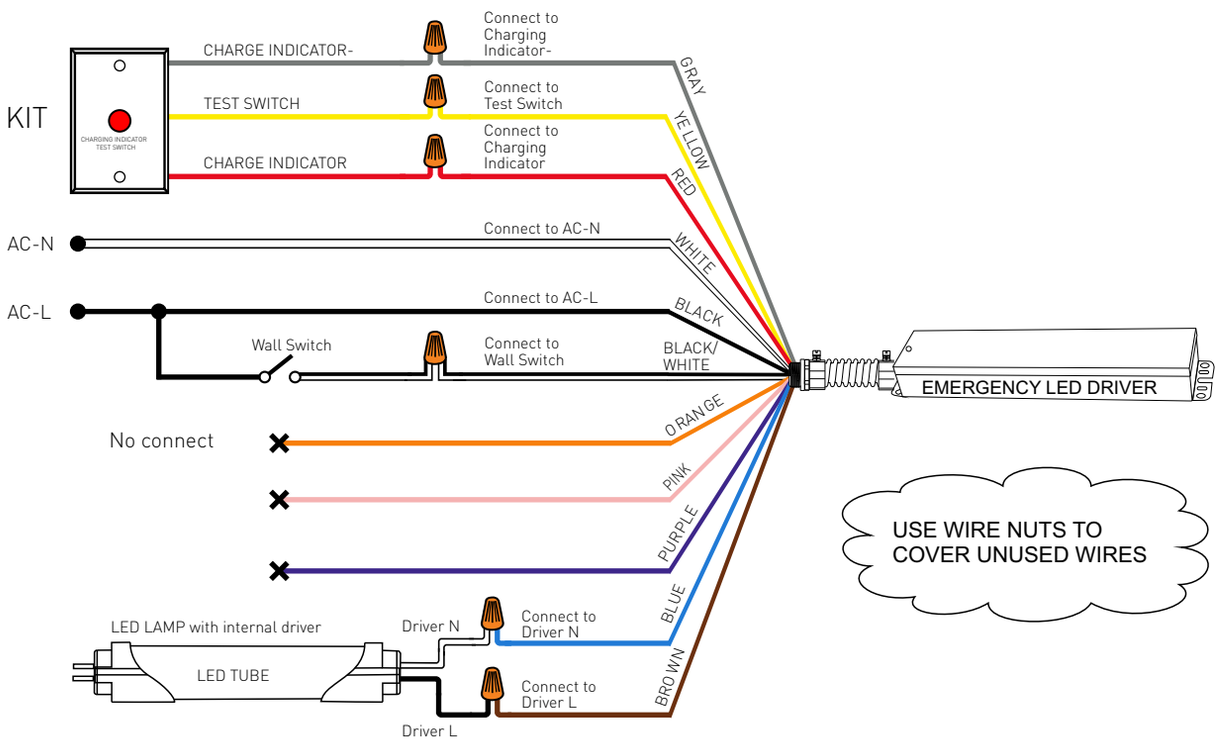

OPERATION(INDICATOR STATUS)

Mode	Test Switch Operation	Indicator Status	Comment & Solutions
AC MODE (1)	NO Press	ON(no flashing)	Emergency led driver is charging
AC MODE (2)	Press once	2s ON and 2s OFF (slow flashing)	Emergency led driver is conducting a 30s short-term emergency test,After 30 seconds,it will automatically restore to normal charging mode
AC MODE (3)	Press twice (2s) in sequence	2s ON and 2s OFF (slow flashing)	Emergency led driver is conducting a long-term emergency test until battery is fully discharged
EMERGENCY MODE	NO Press	2s ON and 2s OFF (slow flashing)	Emergency led driver is conducting a long-term emergency test until battery is no power
ABNORMAL	When flashes (50ms) ON and (50ms) OFF fast, the emergency backup pack is abnormal. Contact the manufacturer.		
WARNING Risk of Electric Shock	Note:Please press once test switch to make certain the battery is turned off, before installation, maintenance, storage or shipping.		

PACKAGE

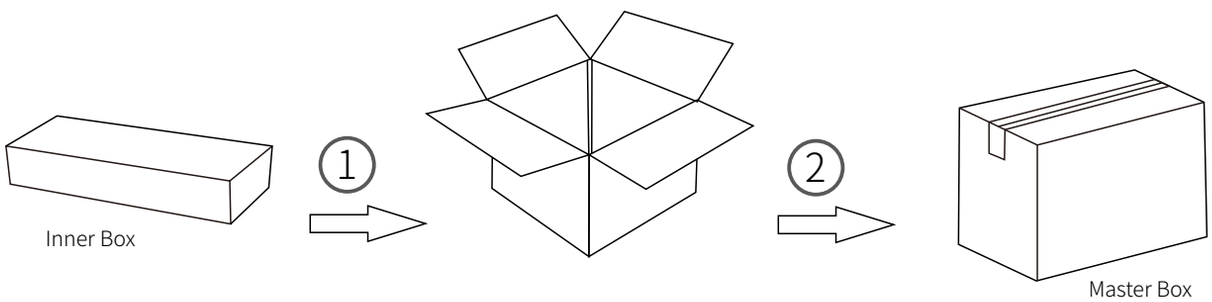

Power	Length	Width	Height	G.W(kg)	N.W(kg)	QTY(pcs)
40W	16.23"(412mm)	11.26"(286mm)	10.24"(260mm)	14	12	10