Stadium/Sport LED Light

Date:..... Location: .....

Product:..... Project:.....

Quantity:..... Catalog# .....

FEATURES

- IP65 rated 10KV surge protection. with up-brim unique outlook
- Robust aluminum housing, easy access wire, slip filter optional
- Corrosion and rust proof
- 50,000 hours lifetime, DLC PREMIUM.

SUITABLE APPLICATIONS

- Gymnasium lighting
- Square plaza lighting
- Sea Port lighting
- Airport lighting
- High mast and Contour lighting

CONSTRUCTION:

Heavy die-cast aluminum alloy housing with black powder-coated finish. Aluminum reflector cup and Anti-UV lens.

ELECTRICAL:

Available as 100-277V or 480V input. -40°C to 45°C.

OPTICAL SYSTEM:

High brightness PHILIPS SMD3030 LED chips.
default 30deg, 40/60/80/120° angle optional.

INSTALLATION&MOUNTING:

Angle-adjustable U bracket by mounting heights 15 to 30ft.

WARRANTY:

5-year limited warranty. Actual performance may differ as a result of end-user environment and application.

PERFORMANCE

Model NO	PowerFactor	Wattage	Voltage/CurrentInput		Light Efficiency	Kelvin Options
			120V	277V		
AST-SPO8-500T1PS2A1	0.92	500W	4.16A	1.80A	150LM/W	5000K

Stadium/Sport LED Light

Features

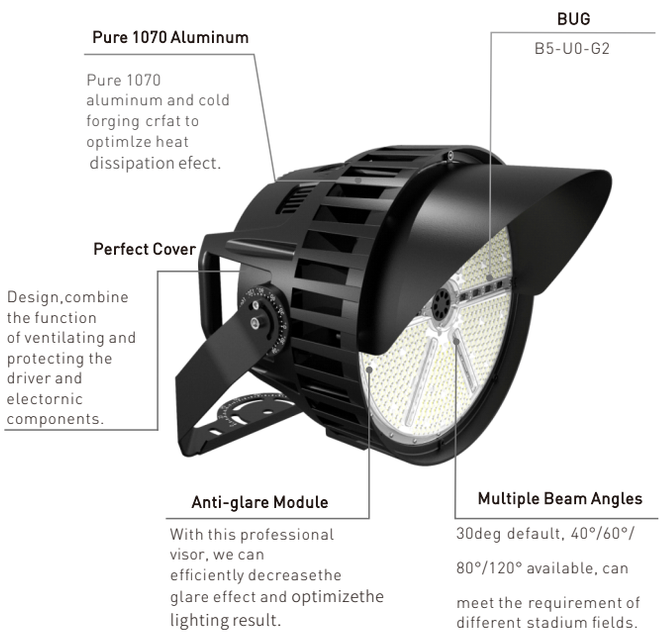

Electric Characteristic

Specification/Model	AST-SP08-500T1PS2A1
LED Driver	UPower Pek
Input power	500W
Lumens output	75000LM
Efficiency	150LM/W
CRI	＞72
Color Temperature	5000K
Input voltage	100-277VAC/480V
Light distribution type	40/60/80/120D
Working temperature	-40+45℃
Junction temperature	＜75℃
lamps efficiency	⩾90%
Certificate	UL CUL DLC
Equivalent	1200-2000W MH/HPS

DIMENSION

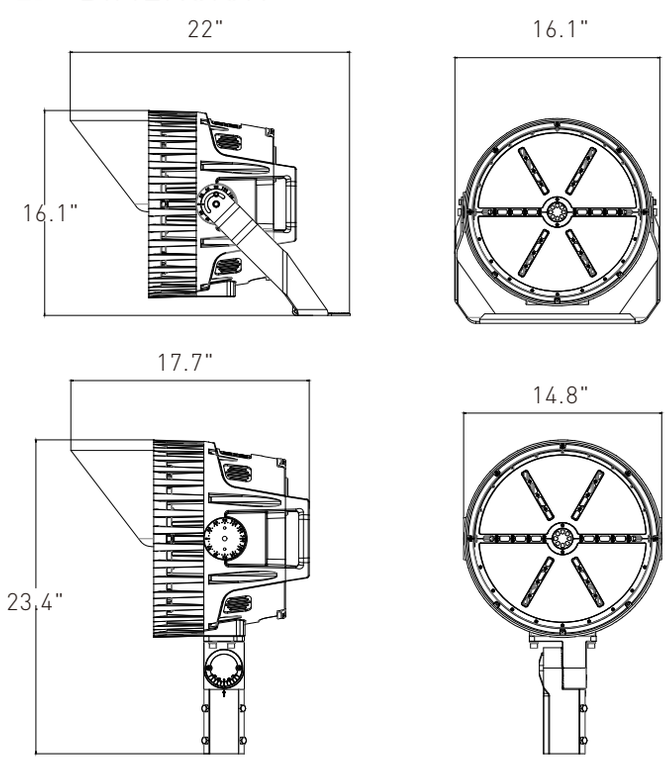

DISTRIBUTION DIAGRAM

AST-SP08-500T1PS2A1

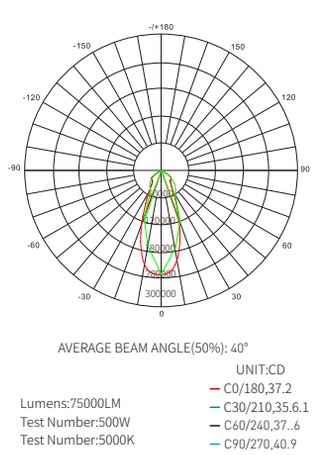

Stadium light installation instructions

Applications:

For stadiums and large squares lighting, can also be used for shipyards, airports,docks and other high pole installation application; can be used forlong-distancesmall-angle projection and large architectural outline lighting.

Cautions:

1.The product should be installed, inspected and maintained by a qualified electrician in accordance with local national electricalsafety regulations;
2.Please turn off the power before checking, installing orremoving;
3. Ensure that the voltage used is the voltage within the product identification range;
4. Use wires that comply with UL (or other local standards) for wiring. The voltage AC120-277V should be wired with not less than 16 AWG, and the voltage AC220-480V should be wire with not less than 18 AWG;
5. Do not install in a hazardous environment. The ambient temperature must not exceed the rated operating temperature of the product;
6. Do not install the product when it rains. Avoid the danger of lightning strikes and avoid accidents;
7. Please use with listed waterproof strain relief bushing when connecting the power supply cord to outlet box
8.Can not use the electric generator to test the LED light.
9.External 0-10V only passive dimmers are supported.

Wiring diagram:

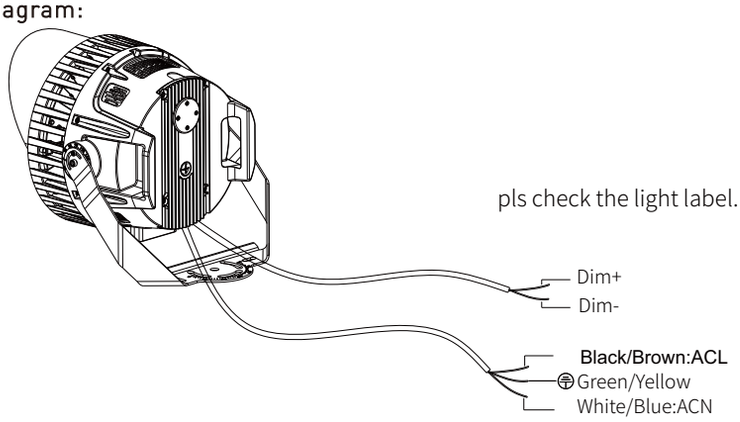

Notice: Please use the dimming+,dimming- DC10V marking leads to connect to outside dimmer.
Class 1 Wiring Only.
Please assure a cumulative leakage current of less than 3.5mA on the control circuit.
The AUX control wire with shrinkable tubing shall not be damaged (no connection).

Optional brackets and installation instructions

There are 2 optional brackets for this fixture,the following is sport light fixtures with different brackets

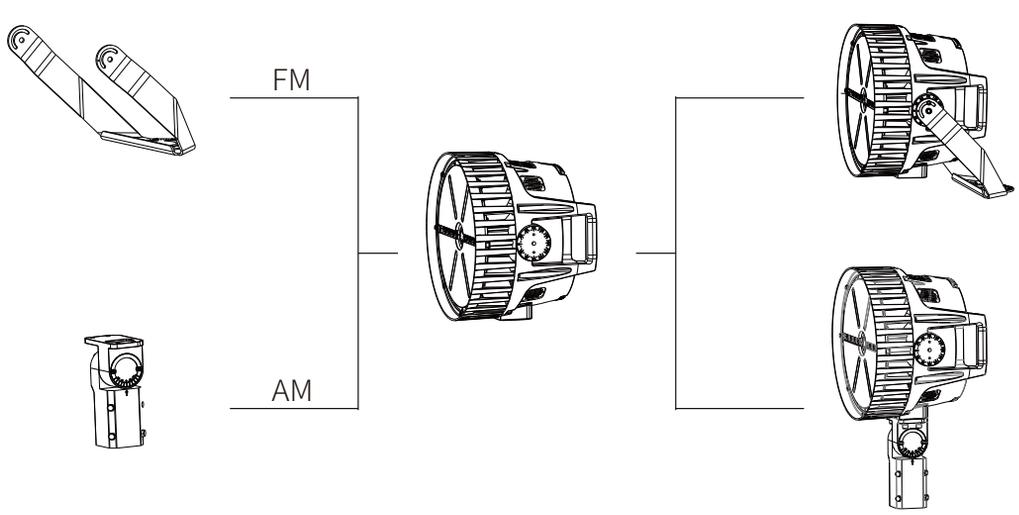

Installation Instructions with different brackets:

1. FLOOD MOUNTING(FM)

1: Fix the FM bracket to the heat sink with M10 screws (Figure 1);
2:Fix it with M6 screws after adjusting to the required the angle (Figure 2).

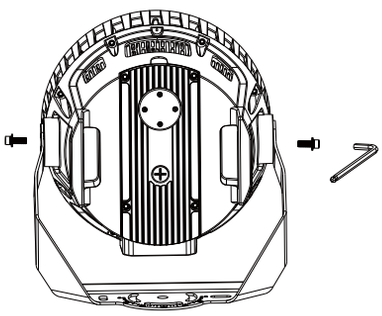

Figure 1

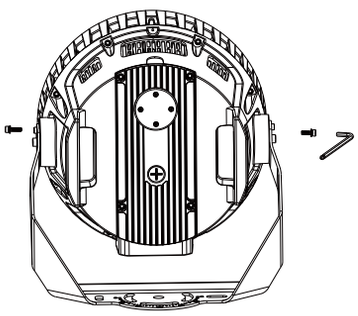

Figure 2

2.ADJUSTABLE SLIP FITTER MOUNTING(AM)

1: Remove the bracket mounting screws on the fixture and run the wires through the bracket. (Figure 3)
2: Install the bracket on the fixture. (Figure 4)

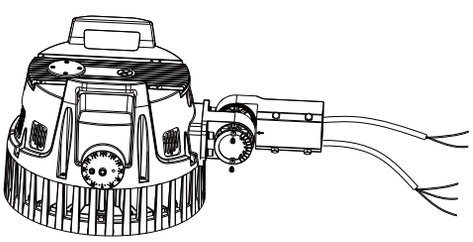

Figure 3

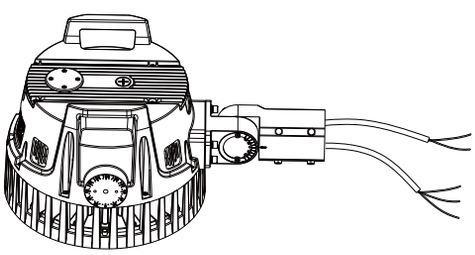

Figure 4

Flood mounting method I (pole mounting) :

1. Mark the hole distance S1 shown in the product to be installed (Figure 5);
2. Drill two holes of distance S1 on the mounting bar (Figure 6).

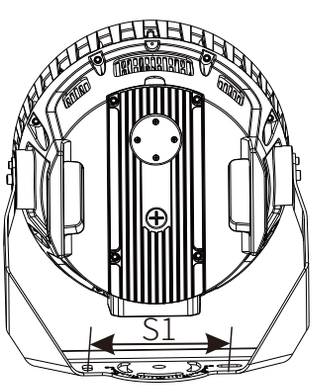

Figure 5

POWER	400/500W
S1	190mm

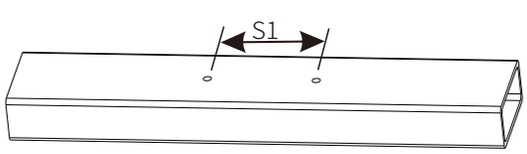

Figure 6

3. Install the luminaire on the crossbar and secure it with nuts, spring washers and flat washers (Figure 7).

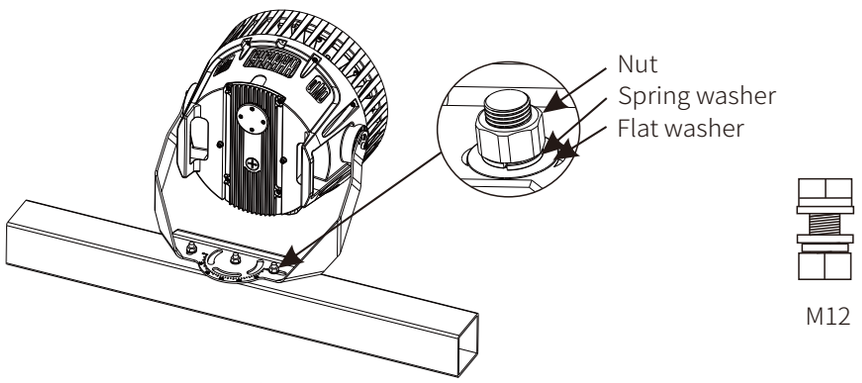

Figure 7

4. Use M6 hex wrench to loosen the adjustment screw used to adjust the angle (Figure 8).

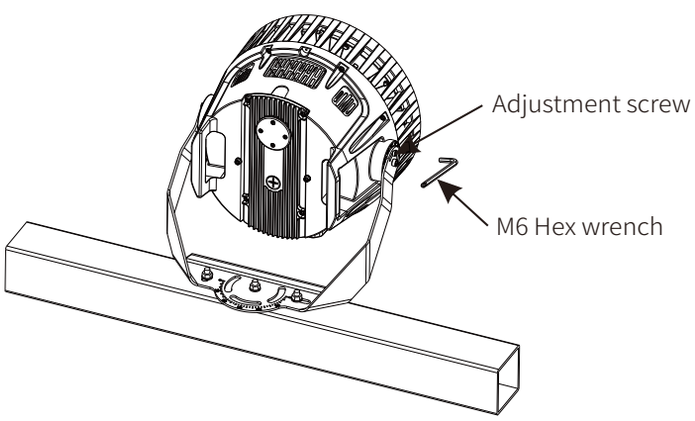

Figure 8

5. According to the need, adjust the projection angle, angle adjustment range; (Figure 9)

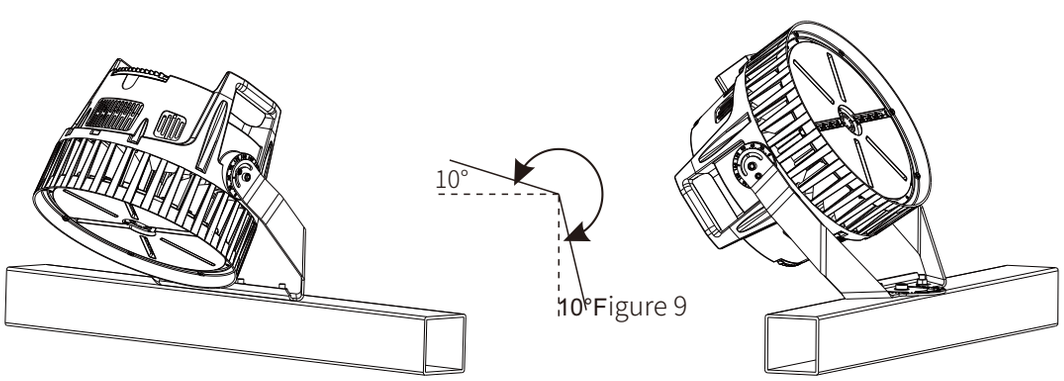

Figure 9

6. Complete the projection angle adjustment and lock the adjustment screw;

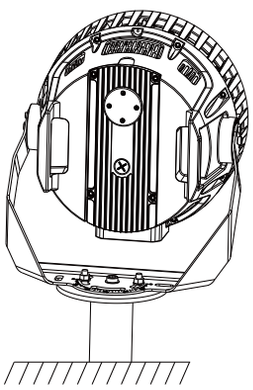

Figure 10

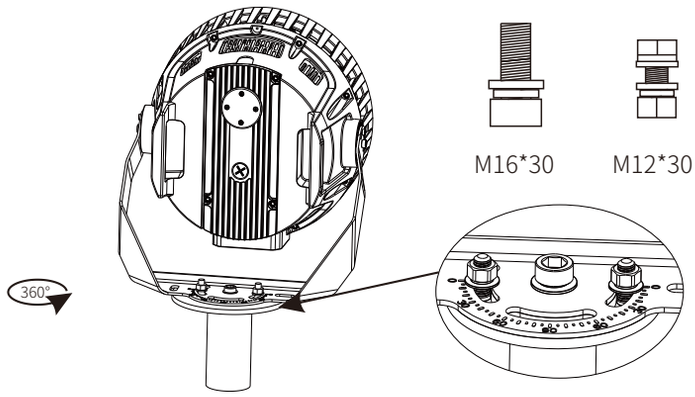

Figure 11

7. According to the previous wiring diagram and select one desired method for wiring.
Notice:Please use listed water proof strain relief bushing when connection the supply cord to the outlet box.

Flood mounting method II (disc holder installation):

1. Fix the product on the disc holder and lock the screws, no need too tight (Figure 10)
2. According to the need to adjust the lighting direction, can be 360 degrees rotation adjustment, tightened with screws when the adjustment is completed (Figure 11);
3. Use an open-end wrench and hex wrench to loosen the adjusting screw for adjusting the angle (Figure 12)
4. According to the need, carry out the projection angle adjustment, angle adjustment range (Figure 13);

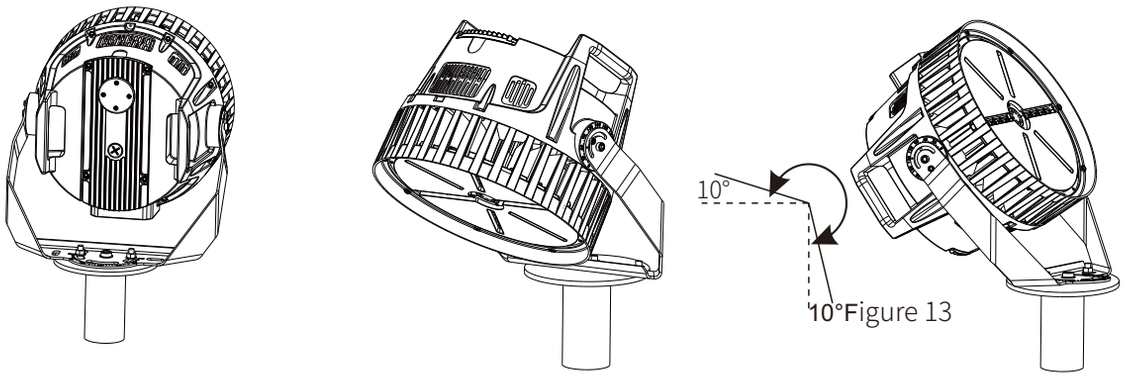

Figure 13

5. Complete the projection angle adjustment and lock the adjustment screw;
6. According to the previous wiring diagram and select one method for wiring.Notice:Please use listed water proof strain relief bushing when connection thesupply cord to the outlet box.

ADJUSTABLE FITTER MOUNTING (AM)

1. Loosen the 4 locking bolts on the slip fitter, connect the wire correctly and put the wire into pole. Then fasten the locking bolts between slip fitter and the pole. (Figure 14)
2.Loosen the fixing bolts and adjusting bolts, align the fixture to required angle. Tighten adjusting bolt and fixing bolts after the angle is confirmed.(Figure 15)Notice: Adjustable angle is 0-90°(Figure 14).

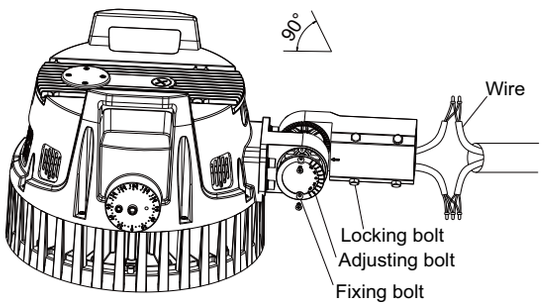

Figure 14

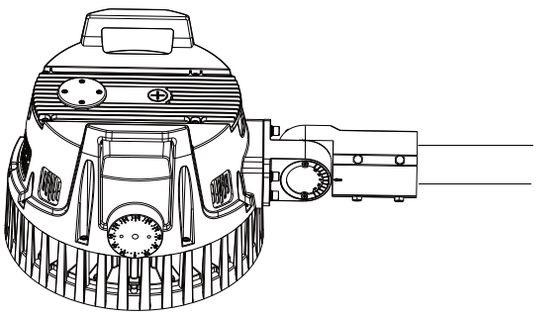

Figure 15

Instructions for light shield

When the light shield function is requird,Fix the light barrier to the luminaire with a screwdriver as required.(Figure 16)

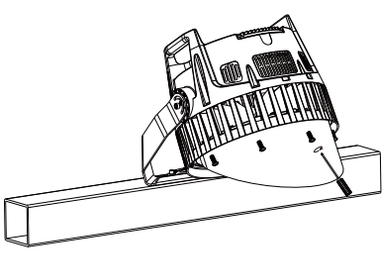

Figure 16