Date:..... Location: .....

Product:..... Project:.....

Quantity:..... Catalog# .....

EDGE LITE EMERGENCY EXIT SIGN

Electric Characteristic

Model NO	Input Wattage	Input Current	Efficiency	Recharge Time	Output Wattage	LED QTY	Ni-cd Battery	Emergency duration	Product Size
LS-GL037R	4W	0.06A	0.96P	24H	1W	ΦRed*8pcs	3.6V/600mAh	>120mins	13.7"*10.47"*1.81"

DIMENSION

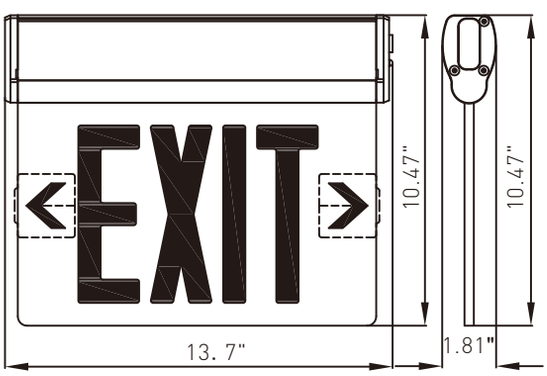

WIRING DIAGRAM

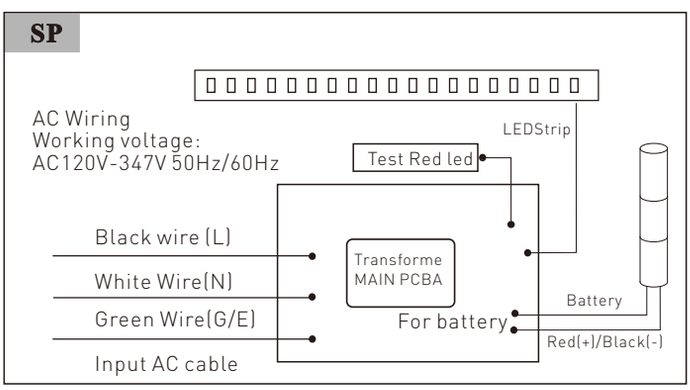

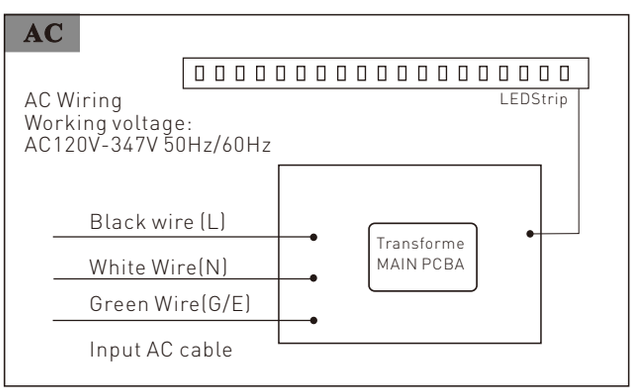

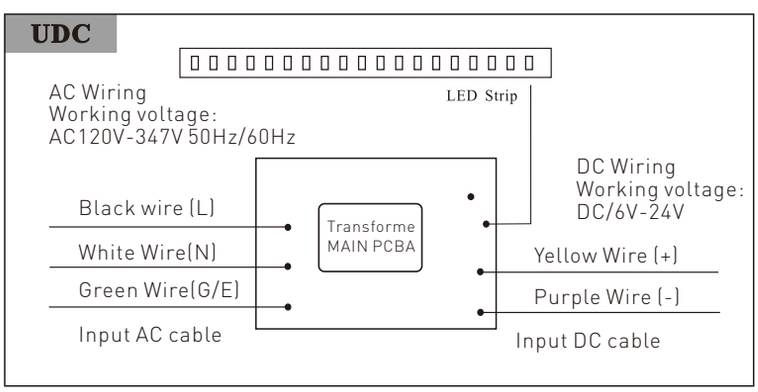

READ AND FOLLOW ALL SAFETY INSTRUCTIONS

- IMPORTANT SAFETY GUIDES:
- Before wiring to power supply, turn off electricity at fuse or circuit breaker.
- Disconnect AC power and unplug battery before servicing.
- Consult your local building code for approved wiring and installation.
- Do not use outdoors.
- Do not let power supply cord touch hot surfaces.
- Do not mount near gas or electric heater.
- Do not install a damaged fi xture.
- This product must be installed in accordance with the applicable installation codes and ordinances.
- Proper grounding is required to ensure personal safety (where applicable)..
- All service shall be performed by qualified personnel.This product must be installed and maintainedin accordance with the applicable installation codes by a person familiar with the construction and operation of the product and the hazards involved.
- Equipment should be mounted in locations and at heights where it will not be subjected to tampered by unauthorized personnel.
- The use of accessory equipment not recommended by the manufacturer may cause an unsafe condition.
- Do not use this equipment for anything other than its intended use.

WARNING:

FAILURE TO FOLLOW THESE INSTRUCTIONS AND WARNINGS MAY RESULT IN DEATH,SERIOUS INJURY OR SIGNIFICANT PROPERTY DAMAGE.For your protection, read and follow these warnings and instructions carefully before installing or maintaining this equipment.

WARNING:

RISK OF ELECTRIC SHOCK- NEVER CONNECT TO, DISCONNECT FROM,OR SERVICE WHILE EOUIPMENTIS ENERGIZED.

WARNING:

RISK OF FIRE. Lamps are hot. Keep combustible material away from hot parts.Observe lamp manufacturer's warnings, recommendations and restrictions on lamp operation and maintenance. Make sure lamps are correctly installed.

WARNING:

DO NOT USE ABRASIVE MATERIALS.OR OTHER SOLVENTS. USE OF THESE SUBSTANCES MAY DAMAGE FIXTURE,WHICH MAY RESULT IN PERSONAL INJURY.

WARNING:

RISK OF PERSONAL INJURY. This product may have sharp edges. Wear gloves toprevent cuts or abrasions when removing from carton, handling, installing and maintaining this product.

FEATURES & SPECIFICATIONS:

INTENDED USE - Ideal for New York applications where steel exits with 8" letter height andemergency lighting are required.

CONSTRUCTION-Aluminum housing.Uniform graphical illumination without shadows or hot spots. Letters 8" high with 1" stroke , with 100 ft viewing distance, based upon UL924 standards.New York City Approved.

Battery in this unit may not be fully charged. After electricity is hooked up to the unit, let the battery charge up to at least 24 hours. Then normal operation of this unit should take effect.

INSTALLATION INSTRUCTIONS:

1.1Extend unswitched 24 hour AC supply of rated voltage to a junction box (supplied by others) installed inaccordance with all applicable codes and standards, Leave a minimum of 8 inches of slack on the wire.This circuit should NOT be energized/live at this time.

1. 2. Remove and discard the canopy kit located inside the sign cavity (Fig. 1).

1. 3. For installation directly over on an electrical junction box, the sign is supplied with universal spider knockouts stamped into the back plate. Alternatively, conduit knockouts are stamped into the top andside for surface wire conduit connection (Fig. 2). Knock out the appropriate holes and bring wires through the hole and outside the sign.

1.4.Mount the unit securely into place. Do not rely on the electrical connections as the only support for the unit; use supplied key hole mounting slots (Fig. 2).

1.5. Make proper wiring connections between the AC supply and the unit's transformer: White.Black -Line120V-347 Volts: Green-Line Earth:

CAUTION! - Failure to insulate unused wire may result in a shock hazard or unsafe condition as well as equipment failure.

1.6. Secure all internal wires.

1.7. Mount the sign securely into place.

1.8.Turn on AC line voltage supply.

2.Ceiling or End Mount (Single or Double Face):

2.1.Folow Steps 1 to 3 of Wall Mounting except DO NOT discard the canony kit located inside the sign.

2.2. A single wire pass-thru and a pair of canopy screw knockouts are stamped into the top and also the end of the sign. Knock out the appropriate set of three holes; top holes for ceiling mount or end holes for end wall mount (Fig. 3).

2.3. Feed all wiring outside the sign through the wire pass-thru hole.

2.4.Feed all wiring into the sign through the wire pass-thru hole.

2.5.Follow steps 4 to 11 of Wall Mounting to complete installation.

NOTE: Secure the canopy to the sign using the supplied hardware. Mount the sign securely to the wall or ceiling. The hole spacing in the canopy is designed to fit most standard electrical junction boxes. A steel, universal spider plate is supplied to allow mounting to alternate size/type boxes (Fig. 4)

＊ END MOUNT OPTION IS NOT AVAILABLE FOR BILINGUAL SIGNS

OPERATION:

1.AC only & AC/DC modelsSign will illuminate when supplied with power.

2.Internally Self-Powered models only

2.1 .To Test, depress the TEST Switch. The AC indicator will go out and the LEDs will switch to battery power.

2.2. Release the TEST Switch. The LEDs will switch back to AC power and the AC indicator will come on.

MAINTEANCE:

1.Code requires that the equipment be tested every 30 days for 30 seconds, and that written records bemaintained for all test results and repairs, Further, the equipment is to be tested once a year for the requiredduration as per Code. The battery is to be replaced or the equipment repaired whenever the equipment failsto operate as intended during the duration test. The manufacturer strongly recommends compliance with all Code requirements.

2. Clean lenses on a regular basis to provide maximum light distribution in case of an emergency.

NOTE: The servicing of any parts should be performed by qualified service personnel only. The use of replacement parts not furnished by the manufacturer may cause equipment failure and will void the warranty.

TROUBLE SHOOTING SIGN DOES NOT LIGHT UP /TURN ON AT ALL

1.Check AC supply -be sure unit has 24 hour AC supply (unswitched)

2. Check AC connector. The transformer/capacitor input power assembly is connected to the LED, circuit board with plastic connector. Insure that this connector is firmly plugged into the LED circuit board. The connector will onllock into place when inserted with the correct orientation.

3. Check AC connections to transformer/capacitor assembly. Insure that input voltage wiring matches the markings onthe transformer/capacitor assembly wires being used.

4.AC supply and connections are OK and LEDs fail to light; replace LED Board Assembly.8.1. Check AC supply - besure unit has 24 hourAC supply(un-switched).

Fig.1 Panel Sign

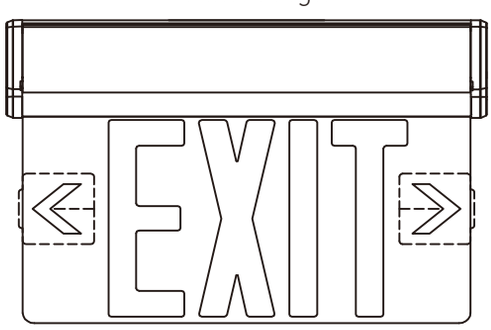

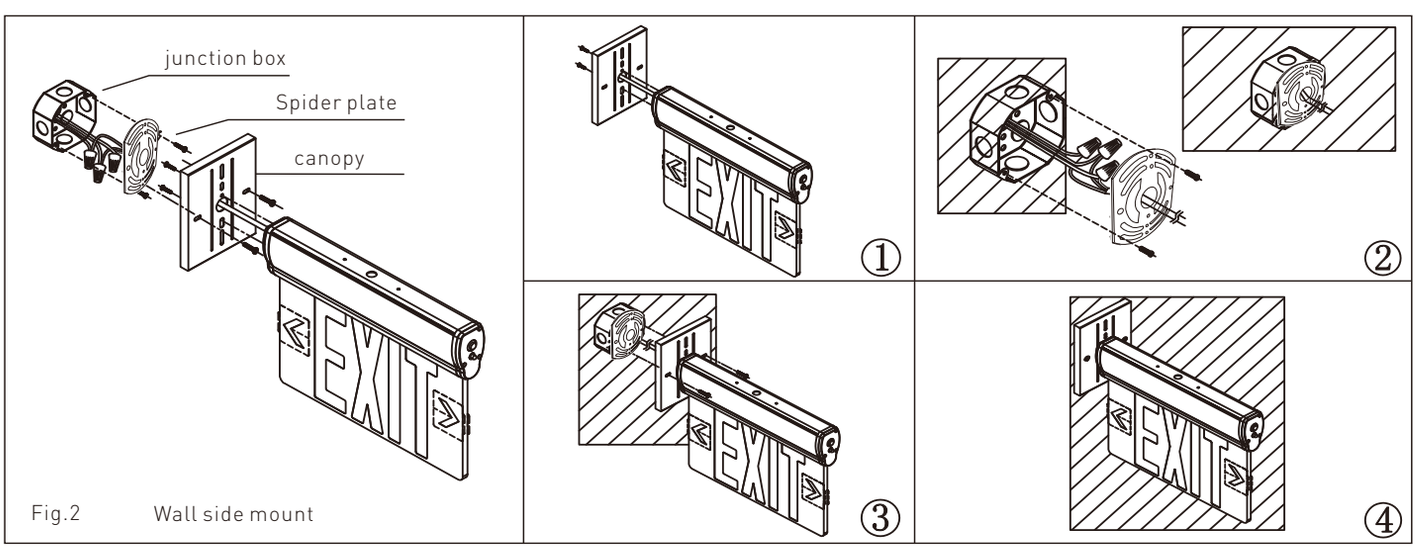

Fig.2 Wall side mount

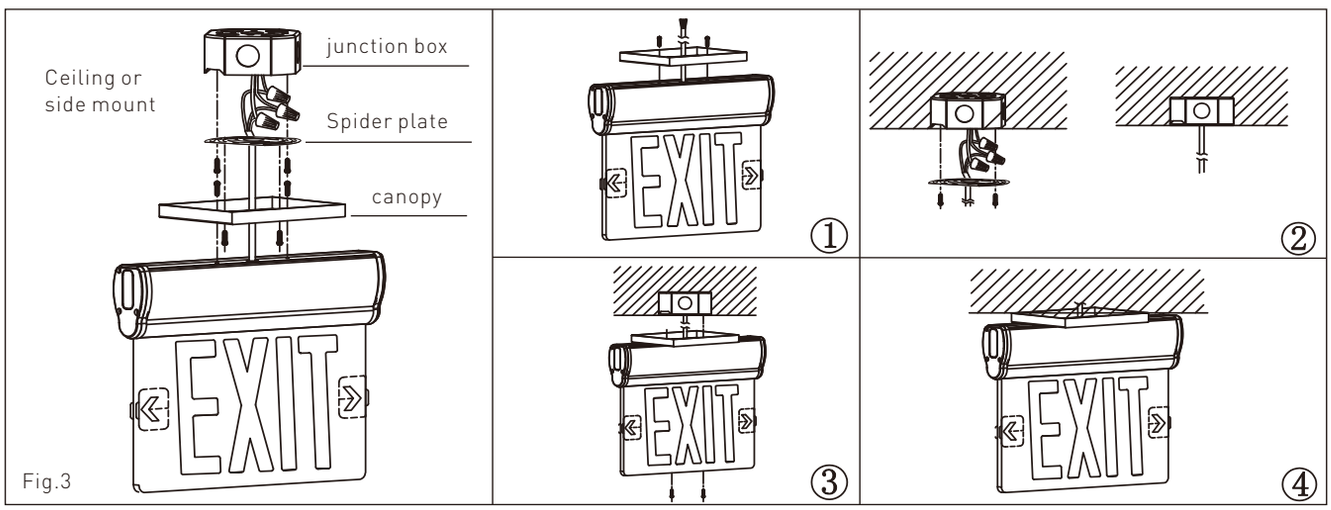
Ceiling or
side mount
junction box
Spider plate
canopy
EXIT
①
②
③
④
Fig.3

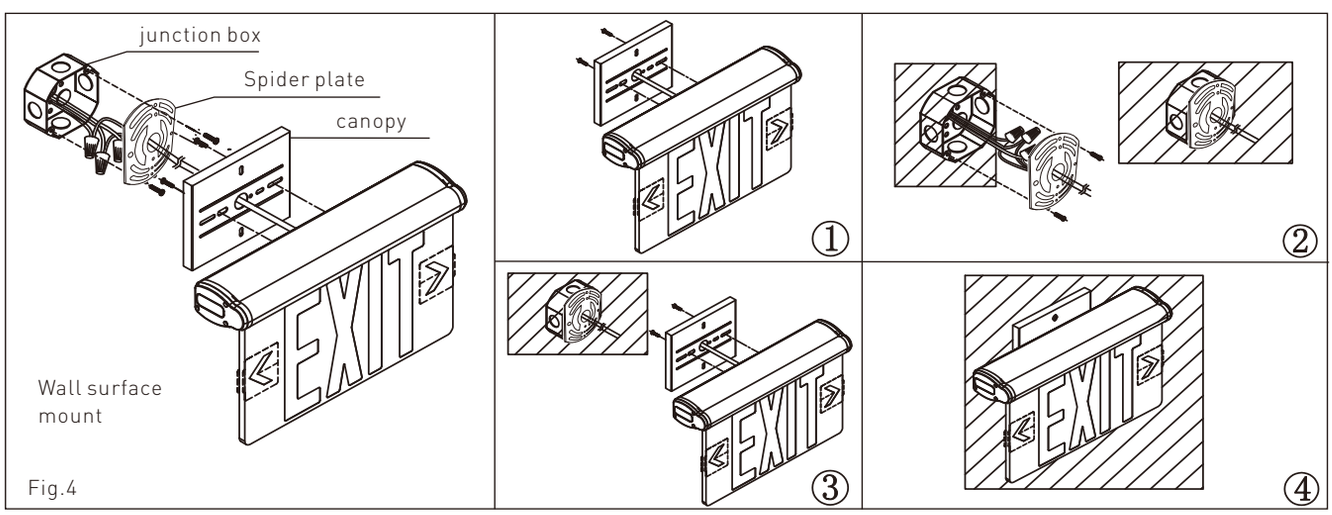
junction box
Spider plate
canopy
EXIT
Wall surface
mount
①
②
③
④
Fig.4