Date:..... Location: .....

Product:..... Project:.....

Quantity:..... Catalog# .....

LED RETROFIT KIT

FEATURES

- Easily upgrade an existing high-output shoebox with LED.
- Easy install, with E39 socket, 270° rotatable.
- Internal fan and thermal sensor which keep the led cool working, Die-cast aluminium with high thermal conductivity
- Super bright led with 135lm/w efficiency with 5000k cool white.
- ETL DLC LISTED.

SUITABLE APPLICATIONS

- Area Lighting/Path Lighting/Garden lighting
- Outdoor Pole/Arm-mounted Area and Roadway Luminaires

LIGHT CHIPS

Use mid-power LM80 certified chips, Active color management maintains superior color consistency over time. Each kit is tuned as a complete system to the best color point before shipment, ensuring color consistency.

THERMAL

High quality solid aluminum & metal-core PCB with internal fan and thermal sensor, which keep the heat away from the led. maintain long lifetime and efficacy, Active temperature monitor automatically dims when the led over-heat.

OPTICAL

Wide beam angle allows the led kit to simulate existing pattern and achieve a uniform,even light appearance without dead spots.

ELECTRICAL

High efficiency SOSEN driver with variable-input voltage range provides constant regulated power to the lamp. Built with superior components, the driver is designed to be durable and long lasting.

WARRANTY:

5-year limited warranty. Actual performance may differ as a result of end-user environment and application.

PERFORMANCE

Model NO	PFC	Wattage	Voltage/Current Input		Light Efficiency	Kelvin Options
			120V	277V		
LSRT02-75L	>0.95	75W	0.625A	0.27A	135LM/W	5000K
LSRT02-120L	>0.95	120W	1.0A	0. 43A	135LM/W	5000K
LSRT02-150L	>0.95	150W	1.25A	0.54A	135LM/W	5000K

Electric Characteristic

Specification/Model	LSRT02-75L	LSRT02-120L	LSRT02-150L
LED Driver	UL Driver		
Input power	75W	120W	150W
Lumens output	10125LM	16200LM	20250LM
Efficiency	135LM/W	135LM/W	135LM/W
CRI	＞72	＞72	＞72
Color Temperature	5000K	5000K	5000K
Input voltage	120-277V/AC	120-277V/AC	120-277V/AC
Light distribution type	120°	120°	120°
Working temperature	-20+45℃	-20+45℃	-20+45℃
Junction temperature	＜75℃	＜75℃	＜75℃
lamps efficiency	⩾90%	⩾90%	⩾90%
Certificate	ETL CETL DLC	ETL CETL DLC	ETL CETL DLC
Equivalent	150-250W MH/HPS	250-350W MH/HPS	350–600W MH/HPS

PRODUCT ORDERING GUIDE

LSRT02-75L
1 2 3
LS RT02 – 75L

☑ LS Factory code

☑ RL02 LED Retrofit Kit

☑ 75L Power 75W

Dimension:

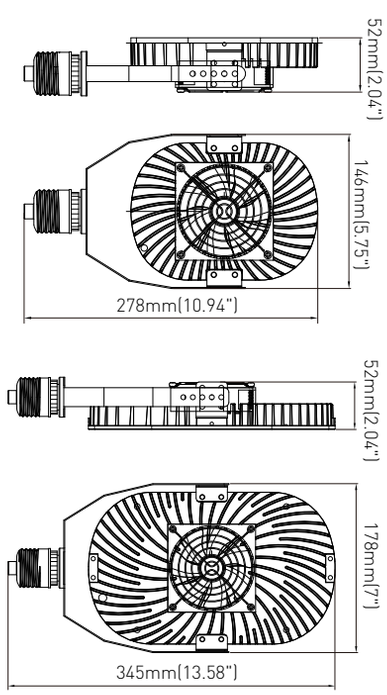

LSRL02-75L
LSRL02-120L

LSRL02-150L

DISTRIBUTION DIAGRAM

LSRT02-75L

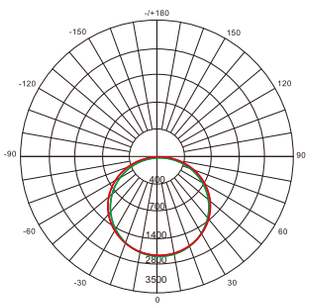

AVERAGE BEAM ANGLE(50%): 120°

Lumens:10125LM
Test Number:75W
Test Number:5000K

UNIT:CD
C0/180,113.7
C30/210,100.1
C60/240,108.6
C90/270,130.9

LSRT02-120L

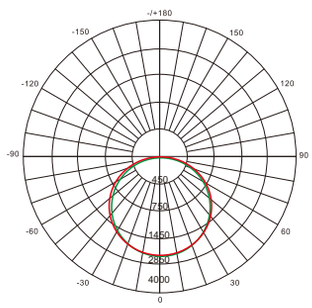

AVERAGE BEAM ANGLE(50%): 120°

Lumens:16200LM
Test Number:120W
Test Number:5000K

UNIT:CD
C0/180,113.7
C30/210,100.1
C60/240,108.6
C90/270,130.9

LSRT02-150L

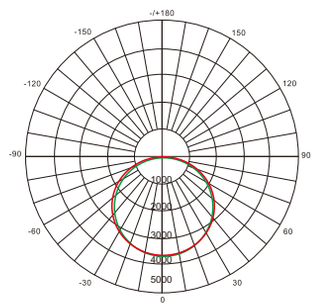

AVERAGE BEAM ANGLE(50%): 120°

Lumens:20250LM
Test Number:150W
Test Number:5000K

UNIT:CD
C0/180,113.7
C30/210,100.1
C60/240,108.6
C90/270,130.9

Installation

A) Bracket mounting system with E39 Mogul adapter for one head (250W, 400W replacements).

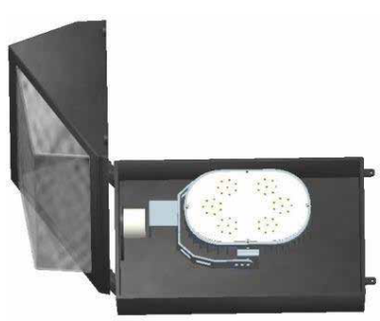

B) Custom fabricated plates, for two or three heads (400W, 1000W replacements)

1. Permanently remove the fixture's reflector. Retrofit warranty is void if the fixture's reflector is not removed. Under no circumstances is it ok to leave the reflector in the fixture. Remov ing the reflector provides extra air flow capacity that is used to keep the led head and driverCool.
2. Wipe excess dust from inside the fixture.
3. Never take the retrofit kit apart. There are no serviceable parts. Never touch the LED chips.this may void the warranty.
4. Remove bulb and existing ballast and/or cut the wires to the ballast and bypass it.
5. Be sure that nothing will touch or fall into the fan blades after the fixture is mounted.
6. Install the LED driver in place of the ballast. You may customize the driver mounting plate by drilling holes so that it will mount into the fixture's existing screw posts.
7. The proper AC input connections to the driver are marked on the driver. There is a Ground,ACN (Neutral) and ACL (Live).
8. Loosen the attachment nut off the Y-bracket/base assembly, screw the base into the fixture's socket. Use the adapter if needed. POWER DOES NOT COME FROM THE FIXTURE'S SOCKET. It only holds the bracket assembly in place. Position the Y-bracket in the desired direction and re-tighten nut.
9. Drver Output: connect red wire to corresponding wire of the LED light, and black wire to corresponding of the LED light, Mutual plug in 4Pin terminal.
.10. Remove the plastic cover from the led head. failure to do so will void the warranty.
11. Re-assemble remaining parts of the fixture and restore power.
12. When the light is on, the metal body will get hot. Do not touch.
13. Never install a dimming control on a non dimmable LED driver.

FOR CUSTOM BRACKET MEASUREMENTS

1. Provide interior dimensions of the fixtures.
2. Provide distance and location by measurement of screw holes that are securing the reflector.