Date:..... Location: .....

Product:..... Project:.....

Quantity:..... Catalog# .....

Area/Parking Lot Shoebox LED light

FEATURES

- Adjustable Slip filter, direct mounts, trunion mounts Available.
- 100-277V or 480V input voltage available.
- Low profile housing with enhanced thermal heat sink.
- 6kV built-in plus 10kV external surge protection
- 50,000hrs Life time.

SUITABLE APPLICATIONS

- Warehouses
- Stadiums
- Factories
- Parking Lots
- Shopping Malls
- Supermarkets
- Logistic Centers
- Auto dealerships

CONSTRUCTION:

Heavy die-cast aluminum alloy housing with bronze powder-coated finish. bronze housing, grey or black available.

OPTICAL SYSTEM:

High brightness lumileds LED chips.
Special PC lens with TYPE III and TYPE V distribution

WARRANTY:

5-year limited warranty. Actual performance may differ as a result of end-user environment and application.

ELECTRICAL:

Available as 120-277V or 480V input. -20°C to 45°C,

INSTALLATION&MOUNTING:

Adjustable Slip filter, direct mounts, trunion mounts bracket for easy installation.

CONTROLS&DIMMING

0-10V dimming comes standard.

PERFORMANCE

Model NO	Wattage	BUG	Voltage/CurrentInput			Light Efficiency	Kelvin Options
			120V	277V	480V		
LS-ESBV7E100WAT3A1	100W	B3-U0-G3	0.83A	0.36A	0.20A	140LM/W	3000K/4000K/5000K
LS-ESBV7E150WAT3A1	150W	B3-U0-G3	1.25A	0.54A	0.31A	140LM/W	3000K/4000K/5000K
LS-ESBV7E200WAT3A1	200W	B4-U0-G3	1.66A	0.72A	0.41A	140LM/W	3000K/4000K/5000K
LS-ESBV7E240WAT3A1	240W	B4-U0-G4	2.00A	0.72A	0.41A	140LM/W	3000K/4000K/5000K
LS-ESBV7E300WAT3A1	300W	B4-U0-G4	2.50A	1.08A	0.62A	140LM/W	3000K/4000K/5000K

Optional Mount Bracket:

AM Adjustable Slipfitter

DM Direct Mount

YM Yoke Mount

Optional Functions:

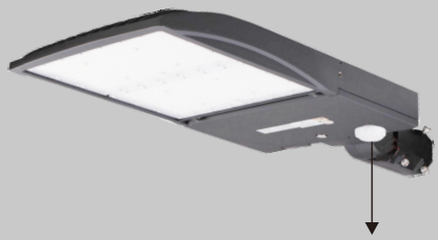

Occupancy sensor options

Photocell sensor options

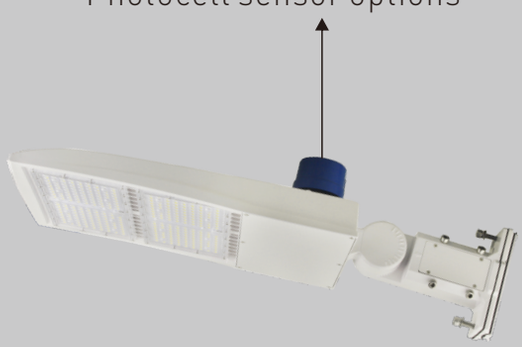

Electric Characteristic

Specification/Model	LS-ESBV7E100WAT3A1	LS-ESBV7E150WAT3A1	LS-ESBV7E200WAT3A1	LS-ESBV7E240WAT3A1	LS-ESBV7E300WAT3A1
LED Driver	UL listed BECKY Brand 0-10V dimmable				
Input power	100W	150W	200W	240W	300W
Lumens output	14000LM	21000LM	28000LM	33600LM	42000LM
Efficiency	140LM/W	140LM/W	140LM/W	140LM/W	140LM/W
CRI	>72	>72	>72	>72	>72
Color Temperature	5000K	5000K	5000K	5000K	5000K
Input voltage	120-277V/AC	120-277V/AC	120-277V/AC	120-277V/AC	120-277V/AC
Light distribution type	TYPE III or TYPE V	TYPE III or TYPE V	TYPE III or TYPE V	TYPE III or TYPE V	TYPE III or TYPE V
Working temperature	-20+45℃	-20+45℃	-20+45℃	-20+45℃	-20+45℃
Junction temperature	<75℃	<75℃	<75℃	<75℃	<75℃
lamps efficiency	⩾90%	⩾90%	⩾90%	⩾90%	⩾90%
Certificate	UL CUL DLC	UL CUL DLC	UL CUL DLC	UL CUL DLC	UL CUL DLC
Equivalent	200-300W MH/HPS	300-450W MH/HPS	450-600W MH/HPS	600-800W MH/HPS	800-1000W MH/HPS

Electric Characteristic

Specification/Model	LS-ESBV7150WCT3H1	LS-ESBV7300WCT3H1
LED Driver	UL listed SOSEN LED DRIVER 0-10V dimmable	
Input power	150W	300W
Lumens output	21000LM	42000LM
Efficiency	140LM/W	140LM/W
CRI	＞72	＞72
Color Temperature	5000K	5000K
Input voltage	277-480V/AC	277-480V/AC
Light distribution type	TYPE III or TYPE V	TYPE III or TYPE V
Working temperature	-20+45℃	-20+45℃
Junction temperature	＜75℃	＜75℃
lamps efficiency	⩾90%	⩾90%
Certificate	UL CUL DLC	UL CUL DLC
Equivalent	300–450W MH/HPS	800-1000WMH/HPS

DIMENSION

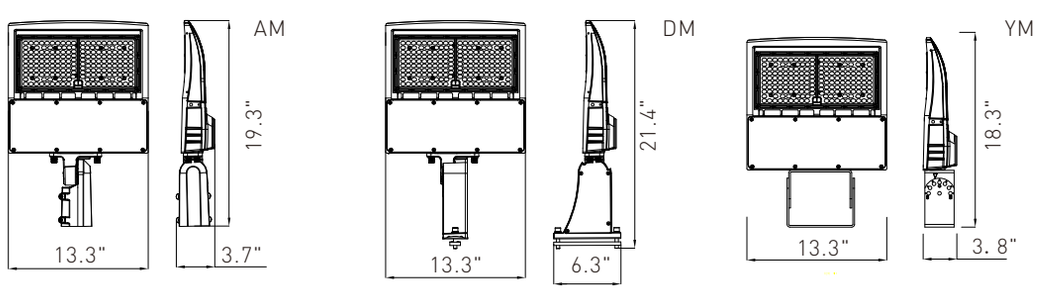

100W/150W

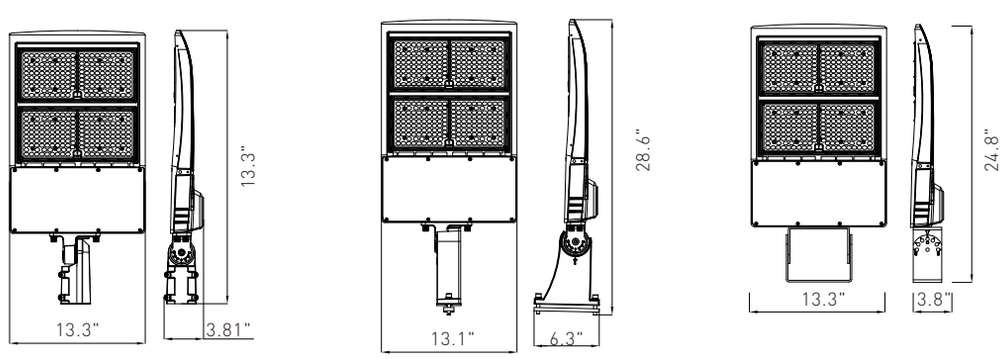

200W/240W/300W

DISTRIBUTION DIAGRAM

LS-ESBV7E100WAT3A1

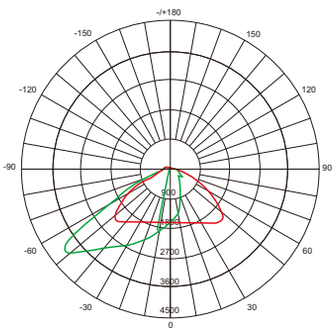

AVERAGE BEAM ANGLE(50%): 122°

Test Number:LS-ESBV7E100WAT3A1
Lumens:14000LM
Test Number:100W
Test Number:5000K

UNIT:CD
C0/180,113.7
C30/210,100.1
C60/240,108.6
C90/270,130.9

LS-ESBV7E150WAT3A1

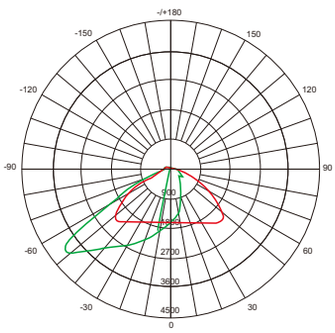

AVERAGE BEAM ANGLE(50%): 122°

Test Number:LS-ESBV7E150WAT3A1
Lumens:21000LM
Test Number:150W
Test Number:5000K

UNIT:CD
C0/180,113.7
C30/210,100.1
C60/240,108.6
C90/270,130.9

LS-ESBV7E200WAT3A1

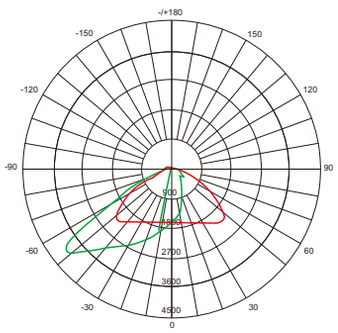

AVERAGE BEAM ANGLE(50%): 122°

Test Number:LS-ESBV7E200WAT3A1
Lumens:28000LM
Test Number:200W
Test Number:5000K

UNIT:CD
C0/180,113.7
C30/210,100.1
C60/240,108.6
C90/270,130.9

LS-ESBV7E240WAT3A1

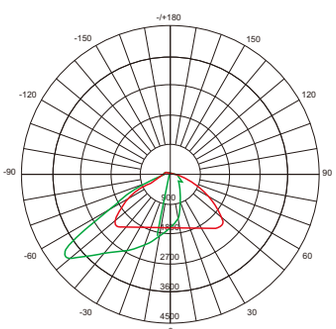

AVERAGE BEAM ANGLE(50%): 122°

Test Number:LS-ESBV7E240WAT3A1
Lumens:33600LM
Test Number:240W
Test Number:5000K

UNIT:CD
C0/180,113.7
C30/210,100.1
C60/240,108.6
C90/270,130.9

LS-ESBV7E300WAT3A1

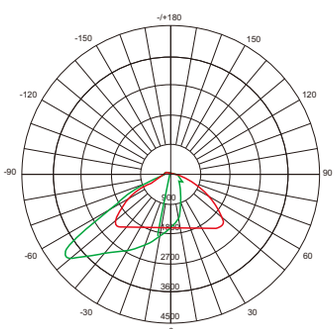

AVERAGE BEAM ANGLE(50%): 122°

Test Number: LS-ESBV7E300WAT3A1
Lumens:42000LM
Test Number:300W
Test Number:5000K

UNIT:CD
C0/180,113.7
C30/210,100.1
C60/240,108.6
C90/270,130.9

Installation

1.ADJUSTABLE FITTER MoUNTING (AM)

Step 1:Loosen the four bolts on AM bracket, connect the wires correctly, and pull the wires into the poles.(Figure 1)

Step 2: Place the bracket into the pole and lock the four bolts.(Figure 2)

Notice: Adjustable angle is 0-90°(Figure 1)

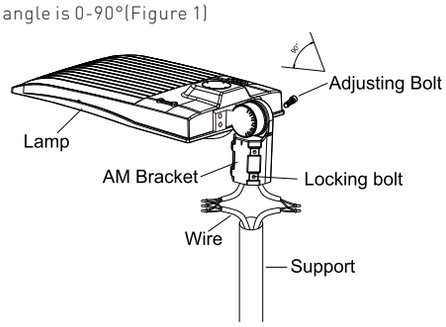

Figure 1

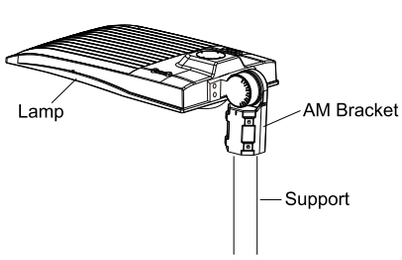

Figure 2

2.DIRECT MOUNTING (DM)

Step 1:Fix DM bracket to square pole with bolt,open the side lid of DM bracket, pull the wire intojunction box, and connect the wire correctly. (Figure 3)

Step 2: Put the connected wire into the junction box, then cover the junction box.(Figure 4)

Notice: Adjustable angle is 0-35°(Figure 3).

Same as round pole installation, please remember to remove the silicon plate when install thefixture in round pole(Figure 5)

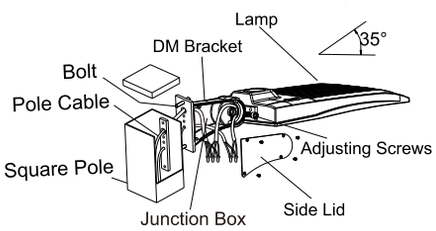

Figure 3

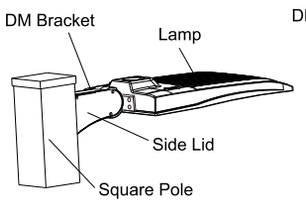

Figure 4

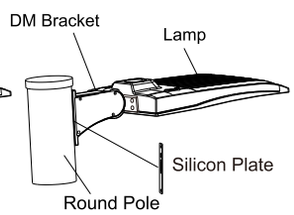

Figure 5

3.YOKE MOUNTING (YM)

Step 1: Drill holes on the wall as shown.(Figure 6)

Step 2: Knock the expansion bolts into the wall.(Figure 7)

Step 3:Connect the fixture to the bracket and tighten the screws; connect the wires properly and put them into junction box. (Figure 8)

Notice: Adjustable angle is 0-90°(Figure 8)

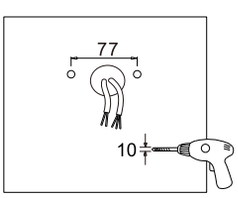

Figure 6

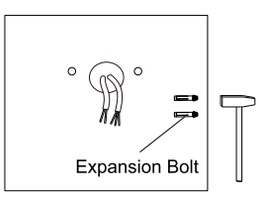

Figure 7

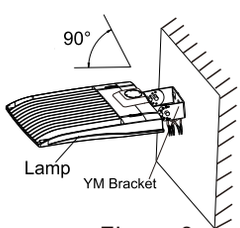

Figure 8